89706 GENEVA II B2C

28-08-2007

NO.	QTY.	DESCRIPTION	PART NUMBER
1	1	Top hinge pin	66616
2	1	Bottom hinge pin	66617
3	1	Cup turret bracket	66621
4	1	Kick plate	66671
5	1	Drip catcher	66676A
6	2	Eye sensor bracket	66680
7	1	Cabinet base	67654
8	1	Motor shelf	67655
9	1	Fuse panel	67661
10	1	Motor drive base	67662A_9
11	1	Motor drive cover	67662B_9
12	1	Whipper base	67734
13	1	L.C.V. fanbox	67757
14	1	Boiler	67759B
15	1	Boiler lid	67759L
16	1	Dispense arm	67796_11
17	1	L.C.V L/H boiler cover	67797
18	1	L.C.V. r/h boiler cover	67798
19	1	Bucket stop combi	67799
20	1	LCV tea chute	67886
21	1	LCV bucket sensor bracket	67887
22	1	LCV cut out bracket	68012
23	1	Door cover support coffe	68051
24	2	Coin catcher bracket cof	68054
25	2	Bottom picture guide	68059
26	2	Picture supports coffee	68060
27	2	Top picture guide	68061
28	1	Top hinge plate	68062
29	1	Coffee fresh cabinet	68063
30	2	Light bracket	68076
31	1	Drip tray holder & clip	68113
32	2	Picture infill panel	68114
33	1	Extract duct	68164
34	1	Microswitch bracket	68167
35	1	Door cover bracket	68203
36	1	Inside top cover	68208
37	1	Bottom door cover	68209
38	1	Rack mount	68310
39	1	Motor mount	68333
40	1	Grinder mount	68591
41	1	Grinder mount cover	68592
42	1	Coffee guard	68593
43	1	Cannister shelf	68594
44	1	microswitch guard	68595
45	1	Hopper holder	68596
46	1	Holder cover	68597
47	1	Hopper hanging bracket	68877
48	1	Triple molex plate	69412
49	1	Blanking plate Geneva	69828
50	2	Canister anchor support	62099
51	1	Lock cam	69194
52	1	Door	69519
53	1	Selection panel	69521
54	2	Bezel retainer	69522
55	1	Coin chute Geneva 2	69567
56	1	Coin mech plate	69568
57	1	Cash box panel	69569
58	1	Cash box Geneva 2	69570
59	1	B2C main panel	69707
60	1	Locking plate	69787
61	1	Drip guide	69829
62	1	Danger label warning disc	10064

NO.	QTY.	DESCRIPTION	PART NUMBER
63	1	Danger live terminal lab	10070
64	4	Snap black verona	10134
65	1	Dust cover for inlet val	20014
66	4	Spacer nylon 10mm high	20015
67	2	Spacer nylon 3.2 high	20017
68	1	T5A	22021
69	1	F15 sticker	22022
70	1	Earth lead short	22058
71	1	F7 label	22092
72	1	Tea brewer silicone seal	22095
73	4	Spacer nylon m3X9.5	22098
74	1	Single way 8 way header	22101
75	2	Cable tie for boiler	22102
76	2	Snap rivet black	22500
77	1	Rating plate	28114
78	1	Canister label decafinat	28128
79	1	Canister label chocolate	28209
80	1	Canister label coffee	28210
81	1	Canister label tea	28211
82	1	Canister label milk	28212
83	1	Canister label sugar	28214
84	1	Canister label topping	28220
85	3	Cobra clip 14mm normal	54011
86	1	Valve port/probe 8mm seal	54048
87	2	Bucket stop cover	54169
88	1	Keyed switch 1 way	54175
89	1	Cup stand bracket lh	54193L
90	1	Cup stand bracket RHS	54193R
91	1	Boiler neon	54210
92	2	Blanking gromet	54211
93	1	Canister label soup	54217
94	1	Jug key earth link	54392
95	1	UK mains lead with 13A p	54416
96	1	Cut out tube 338	54459
97	1	Filter unit	54486
98	6	Swaged port valve seal	54543
99	1	Lock cash box	54599
100	2	Boiler cover spacer vero	54626
101	4	Whipper motor	54645
102	3	Motor retainer grey	54649
103	1	Mix bowl inlet pipe black	54654
104	1	Mix bowl inlet pipe brown	54655
105	3	Mix bowl inlet pipe grey	54656
106	1	Whipper chamber brown	54657
107	3	Whipper chamber grey	54658
108	3	Steam trap grey	54662
109	1	Cup turret	54671
110	1	Cup turret lid	54671_L
111	1	Cup turret celluloid sle	54671_S
112	1	Diff pressure switch	54700
113	1	Motor retainer brown	54749
114	8	Whipper seal	54767
115	1	P clip NX5	54789
116	1	Boiler seal	54827
117	1	SSR ultra	54873
118	1	5mm pin bullet	54897
119	1	"T" piece coffee brewer	54910
120	1	Brewer spout Nu/Ver/Pac	54924
121	6	Ing motor 120rpm	54930
122	1	Fmcu pcb Vinc/Studio/Ver	54955
123	1	Dispence head pcb	54990
124	6	Outlet valve 8mm 24vDC	55003

NO.	QTY.	DESCRIPTION	PART NUMBER
125	1	Loom brewer tea/coffee v	55128
126	1	Overflow sensor bracket	55130
127	1	Internal keypad loom	55136
128	4	Bernlight 28501 lamphold	55143
129	2	Flour tube white	55144
130	3	Agitator small wire auger	55187
131	3	Tie wrap holder snap lock	55217
132	1	Cable cleat size 1	55240
133	2	Door magnet	55341
134	1	Skirt cup drop black	55405
135	1	Bin 25 ltr	55419
136	1	Dispence tube 3 way	55427
137	1	Switch rocker on/off ver	55458
138	1	Thermal cutout 85°	55528
139	1	Cup stand	55544-
140	1	Boiler foam pad	55551
141	1	Front bucket sensor	55620
142	2	4mm pin bullet	55639
143	1	DC rio board	55676
144	1	Hose bung flangeless plug	55692
145	1	Dispense head motor	55721A
146	2	Dispence head roller	55723
147	6	Dispense cover roller	55724
148	1	Drive bar	55725
149	1	Mains lead device	55767
150	1	Black hose 16mm i/d	55768
151	1	Hose 1 1/4 extra flex	55770
152	1	Fuse 5a 415v (t) 32mm cer	55808
153	1	Bucket 10Ltr	55854
154	1	Boiler probe assembly	94543
155	1	Keypad circuit only	55960
156	1	Cup sensor receiver	56022
157	1	Cup sensor sender	56023
158	1	Ingredient chute central	56028
159	2	R/h chute	56032
160	3	L/h chute	56037
161	2	Door buffer rubber verona	56053
162	1	15A fuse	56114
163	1	Boiler element	56155
164	1	Fuse 7A 240V	56156
165	4	Foot m10X35	56253
166	12	Long deep board support	56271
167	1	Psu dc 100W	56374
168	1	Base panel studio	56387
169	1	Keypad decal studio	56393
170	1	Warning label	56399
171	1	Tea filter belt	56435
172	1	Cup housing	56442
173	1	C/f cup holder eng	56484
174	1	Fmcu card reader mount	56575
175	1	Grinder	56642
176	1	Bean hopper	56643
177	1	Gear motor pinion	56679
178	1	Wittern reject bracket	56830A
179	1	Wittern coin slot	56830B
180	1	Wittern reject bezel	56830C
181	1	Wittern reject push butt	56830D
182	1	Wittern coin catcher	56830E
183	1	Wittern door handle	56830F
184	1	Wittern coin catch bezel	56830G
185	1	Coin catcher door flap	56830H
186	1	Door lock barrel + keys	56830K

NO.	QTY.	DESCRIPTION	PART NUMBER
187	1	Canister bracket	56993
188	1	Coffee chamber lid brown	57269
189	1	Rectangle nozel holder	57363
190	6	Angled nozel	57364
191	1	Round nozel holder	57365
192	1	Tea bowl black	57417
193	1	Tea bowl lid	57418
194	1	Dual 18W balast	57467
195	1	Dispense arm label	57471
196	1	Geneva II keypad	57491
197	1	SSR celduc	57526
198	1	Spacer 1mm cup drop	57566
199	1	Grey tube stud	57644
200	1	Red tube stud	57645
201	1	Black tube stud	57646
202	1	Yellow tube stud	57647
203	1	Blue tube stud	57648
204	1	Fan sounon 24v DC	57714
205	1	Crimp female 18-24 awg	58017
206	1	Front flange plastic aug	59023
207	1	Canister plastic auger	59059
208	2	Eye sensor lens small	59065
209	2	Plastic spacers -0485068	59134
210	2	Spacer plastic m4X13X	59145
211	4	Canister 64mm wire auger	59204
212	1	24DC inlet valve	59255
213	1	Cup unit 24V DC uk 73mm	59332
214	1	Drip tray grill	59339
215	1	Drip tray	59340
216	1	24/7 carousel retainer	66668
217	1	Earth washer large	67068
218	2	Arm rollor bar	67882
219	3	Cover roller bar	67883
220	1	Dispense head shroud	68605
221	2	Grommet 20mm	71026
222	3	16 amp fuseholder bussman	71101
223	2	Micro switch	71124
224	2	Actuator arm long brewer	71124A
225	1	Filter cap ser pac fn610	71599
226	1	Snapper clip no6	71730
227	3	Tie wrap base self adhes	71750
228	1	Whipper base brown	84664
229	3	Whipper base grey	84665
230	1	12 oz rh tea brewer	88100
231	1	Coffee brewer red lever	89020
232	2m	1.0 white wire	22216
233	1.0m	1.0mm blue wire	22218
234	.9m	Tube braided black 10x3.5	54113
235	.05m	Silicone tube 6mmIdx3mm wall	54161
236	.4m	Silicone tube 3.2x1.6 wall	54570
237	4.2m	Grey tube platinum cured 6x10	54641
238	.5m	Silicone tube black 9x13	54819
239	1.0m	Silicone tube 5x1.5 black	54820
240	1	Loom brewer t/coff	55128
241	.3m	Tube 9x15	55428
242	1.45m	Tube 11x18mm	55438
243	1	Link set	55606
244	1	Dispense head loom	55728
245	1	Main loom Wittern	56427
246	.270m	Silicone tube 6x10 black	56519
247	1	Operators guide	56571
248	1	Smart card idc loom	56628
249	1	Dispense head internal loom	57315
250	1	Geneva 2 keypad loom	57447
251	1	Lcd lead	57481
252	.45m	Red tube 6x10	57641
253	.37m	Yellow tube 6x10	57642
254	.34m	Blue tube 6x10	57643
255	1	Geneva test spec	57707
256	.6m	Tube 8x12mm	59070
257	2.5m	White cable 16/0.2mm	57714

ISSUE 1

89706 GENEVA II B2C

28-08-2007

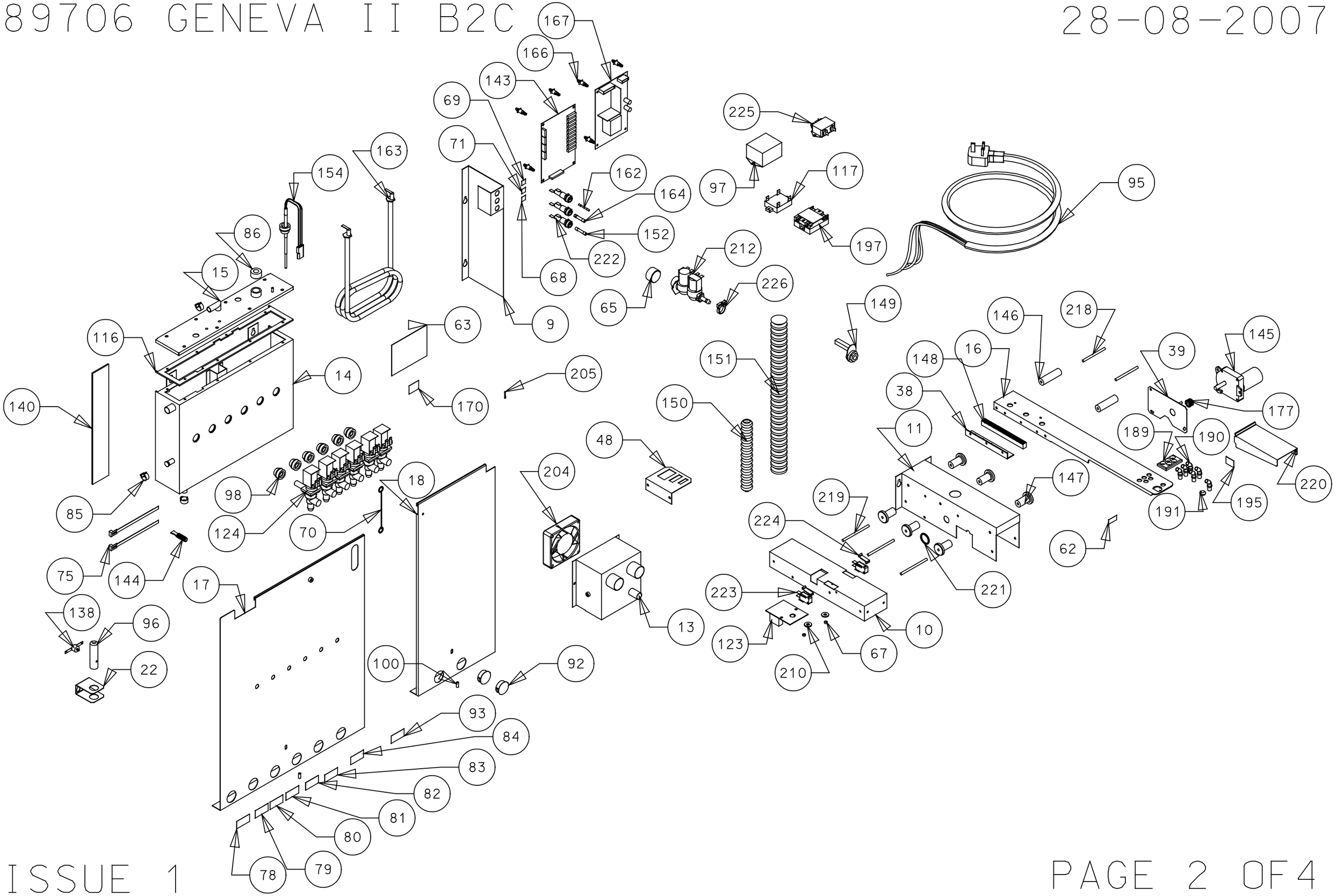

ISSUE 1

...\geneva2\89706_btoc\89706.dgn 28/08/2007 16:48:37

89706 GENEVA II B2C

28-08-2007

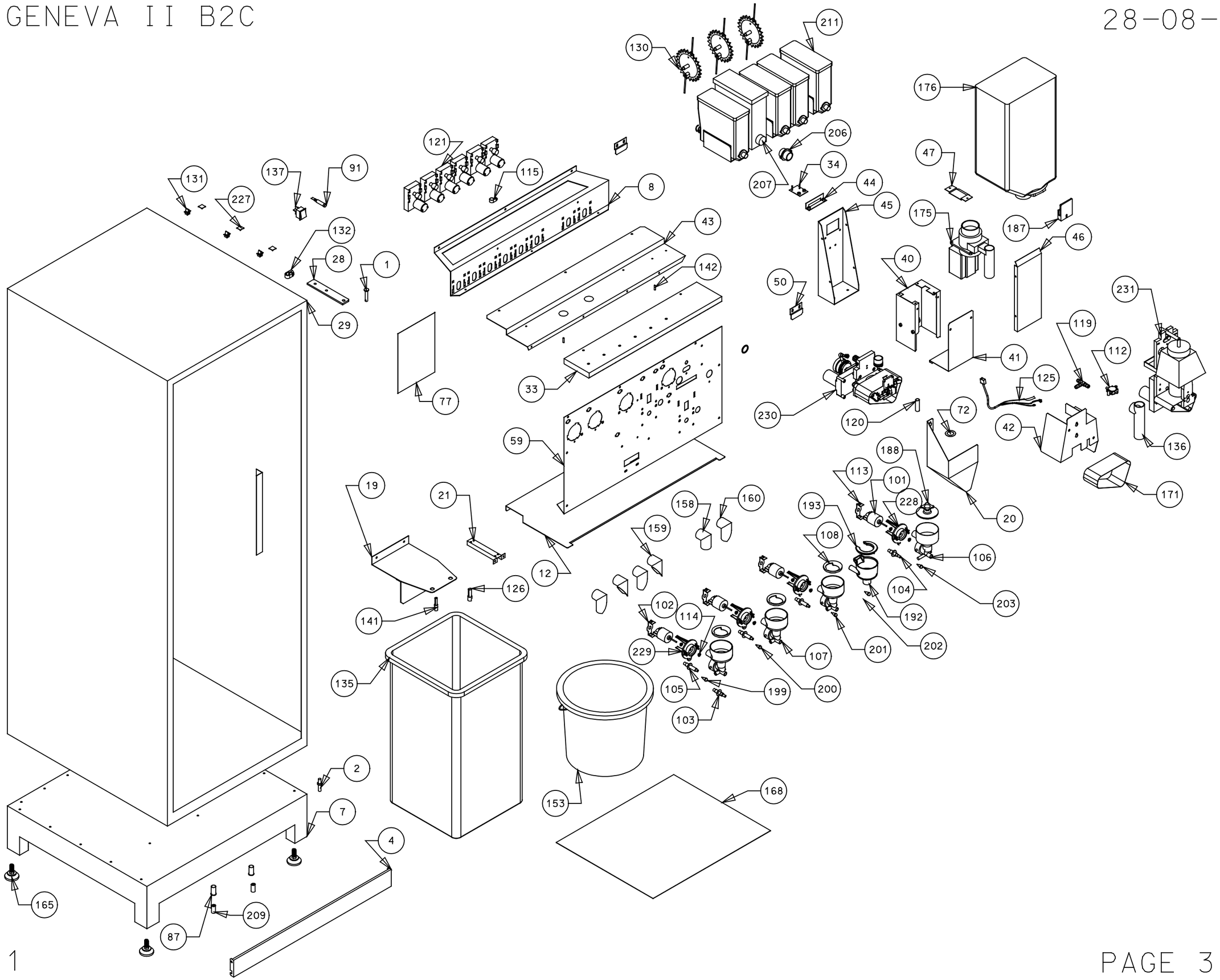

89706 GENEVA II B2C

28-08-2007

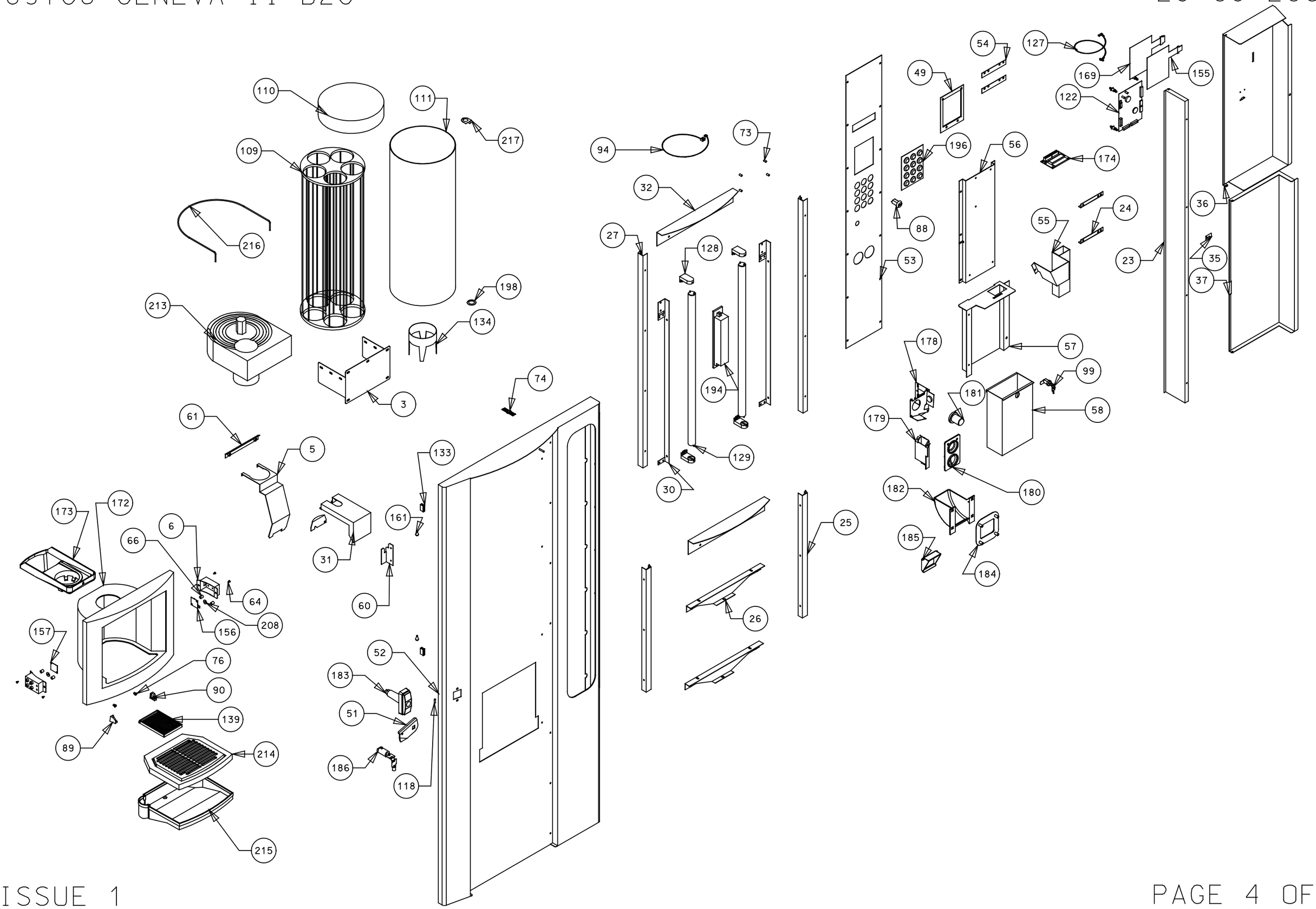

ISSUE 1